## PROLINE™-DD DISCONNECT ENCLOSURE, TYPE 12

### INDUSTRY STANDARDS

UL 508A Listed; Type 12; File Number E61997
cUL Listed per CSA C22.2 No. 94; Type 12; File No. E61997

NEMA/EEMAC Type 12
CSA File Number 42186: Type 12
VDE IP55
IEC 60529, IP55

### APPLICATION

For a modular disconnect system with application flexibility, choose a PROLINE™ -DD Modular Enclosure. These two-door packages and their components are compatible with any of the standard flange-mounted disconnect switches and mechanisms described in the Preferred Cutout Overview section.

**BULLETIN: P20DC**

Standard Product

| Catalog Number | AxBxC in./mm | Nominal Size in./mm |
|---|---|---|
| PTDDC20185 | 78.11 x 78.18 x 19.65<br>1984 x 1808 x 499 | 78.74 x 70.87 x 19.69<br>2000 x 1800 x 500 |
| PTDDC20186 | 78.11 x 78.18 x 23.58<br>1984 x 1808 x 599 | 78.74 x 70.87 x 23.62<br>2000 x 1800 x 600 |

PROLINE-DD Modular Enclosure

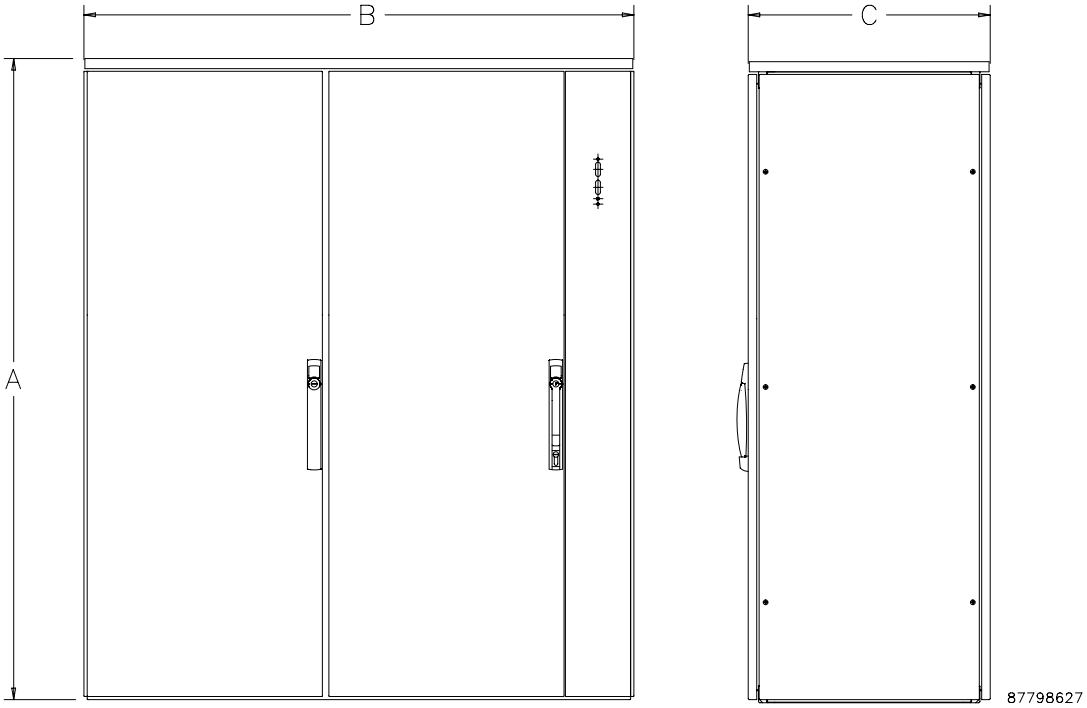

**Standard Configuration**

- Frame with removable centerpost at front and fixed centerpost at rear
- Solid Top
- Solid Sides
- Left Rear Cover, 2000 x 800mm
- Right Rear Cover, 2000 x 1000mm
- Master Disconnect Door & Mullion
- Slave Door, 2000 x 800mm
- Mechanical Interlock

**Optional Components**

All optional components may be ordered separately. Components labeled A-T-O may be included in an A-T-O configuration.

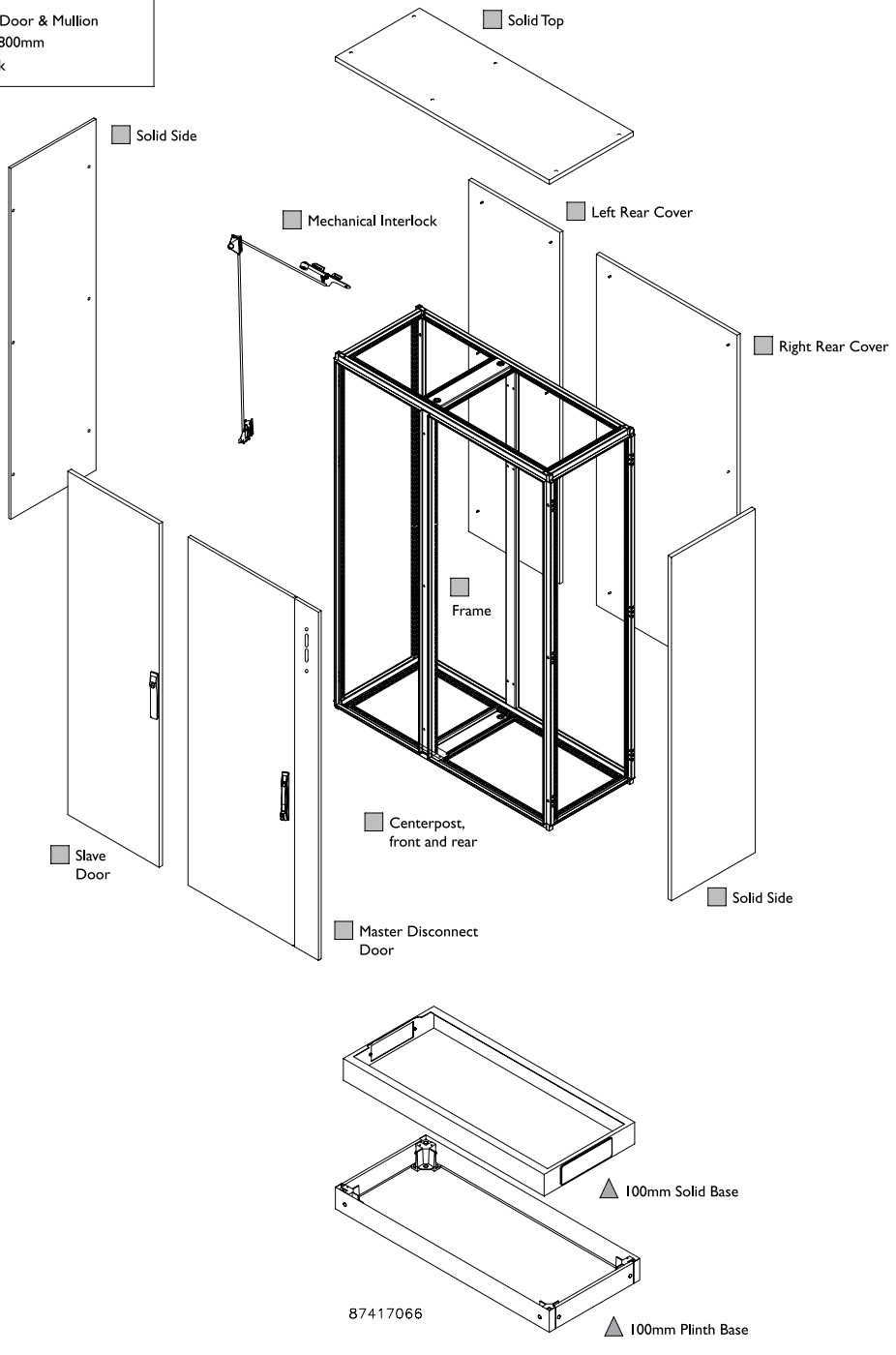

## DISCONNECT MOUNTING SPACE

Disconnects will occupy space on panel shown by dimensions E1, F1 and G1. Wiring space W1 is available when disconnect is installed in the enclosure.

*See Technical Information for E1 Spacing by Enclosure Height for various disconnect switch manufacturers.*

W1 = Wiring Space.

*See Technical Information chapter for wire bend space.*

Refer to ***NATIONAL ELECTRICAL CODE, 2005*** article 430-10(b) for wiring space required for line side conductors to be connected to disconnect.

**Verify your application to determine whether wiring space is adequate.**

*Consult Space Occupied by Disconnect drawing to determine whether the disconnect device you are using will fit the enclosure size you have selected.*

Space Occupied by Disconnect

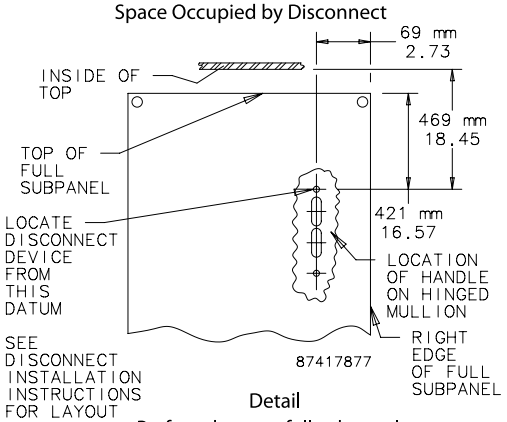


Preferred cutout full subpanel

## PROLINE™-DD MODULAR SUBPANEL

The Subpanel mounts inside the PROLINE-DD Modular Enclosures. The subpanel size is 2000 x 1800 mm and is constructed of 10 gauge steel. It also has glide blocks to facilitate handling and installation (hardware is included).

BULLETIN: P20

| Catalog Number | AxB in./mm | Type | Used with Assembled Enclosure 1 | Used with Assembled Enclosure 2 |
|---|---|---|---|---|
| PPF2018 | 78.70 x 70.90<br>2000 x 1800 | Subpanel White Painted Finish | PTDDC20185 | PTDDC20186 |
| PPF2018G | 78.70 x 70.90<br>2000 x 1800 | Subpanel Conductive Finish | PTDDC20185 | PTDDC20186 |

Subpanel

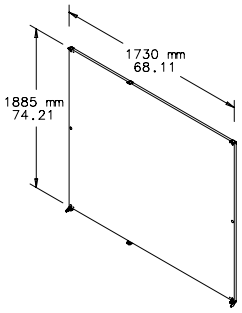


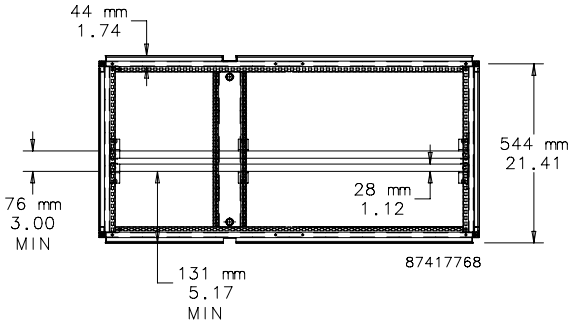


## PROLINE™-DD MODULAR 100-MM BASES

These 100-mm solid and plinth bases mount to PROLINE-DD Modular Enclosures. Gland plates are necessary to maintain Type 12 rating when using plinth base.

BULLETIN: P20

| Catalog Number | Type | Used with Assembly | D (mm) | D (in.) |
|---|---|---|---|---|
| PB1185 | 100-mm Solid Base | PTDDC20185 | 459 | 18.07 |
| PB1186 | 100-mm Solid Base | PTDDC20186 | 559 | 22.01 |
| PPB1186 | 100-mm Plinth Base | PTDDC20186 | 559 | 22.01 |

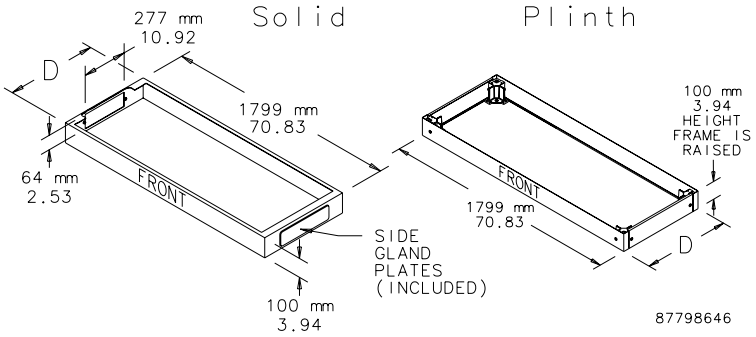

## PREFERRED-CUTOUT OVERVIEW

### APPLICATION

Enclosures having the preferred cutout are sized for use with up to 200A disconnect switches and up to 400A circuit breakers unless otherwise specified. The preferred cutout accepts the smaller operating handle whose mounting hole centers are 4.688 in. apart. Preferred cutouts are standard in mild steel wall-mount enclosures, modular enclosures and some select large mild steel enclosures. They are also present on all standard stainless steel offerings.
Operator adapter for preferred cutouts must be ordered separately to be used with A21S, A28S4 and A4S enclosures.

Preferred cutouts are designed to house the following:

**Allen-Bradley**
- Bulletin 1494V disconnect switches with flange-mount variable-depth operating mechanisms and Bulletin 1494V flange-mount variable-depth operating mechanisms for circuit breakers
- Bulletin 140U flexible cable operating mechanisms for 140U molded case circuit breakers
- Bulletin 140G flexible cable and variable depth flange-mount molded case circuit breakers
- Bulletin 1494C cable-operated disconnect switches with flange-mount handles
- Bulletin 194RC cable-operated flange-mount handles for use with the NFPA 79 compliant 194R IEC rotary disconnect switches

*Allen-Bradley Bulletin 1494V-R1, -R2 and -W2 operating handles and Allen-Bradley Bulletin 1494F disconnect devices or Bulletin 1494D circuit breaker operators will NOT fit these enclosures.*

**ABB Controls** flange-mount variable-depth operating mechanisms for disconnect switches and circuit breakers. Also the cable version for circuit breakers.

**Eaton Cutler-Hammer** Type C361 flange-mount variable-depth operating mechanisms with disconnect switches and Type C371 flange-mount variable-depth operating mechanisms for circuit breakers.

**General Electric** Type STDA flange handles and variable-depth operating mechanisms for disconnect switches and circuit breakers. Also SPECTRAFLEX™ cable operators for circuit breakers.

**Siemens ITE** MAX FLEX® flange-mount variable-depth operating handles for circuit breakers.

**Schneider Square D®** Class 9422 disconnect switches with flange-mount variable-depth operating mechanisms or cable mechanisms and Class 9422 flange-mount variable-depth operating mechanisms or cable mechanisms for circuit breakers.
*These enclosures will NOT accept Square D Class 9422 bracket-mounted disconnect devices, Class 9422TG1 or TG2 devices.*

### ORDERING

Order the disconnect switch, operating handle and operating mechanism separately. See Technical Information in the Hoffman Specifier's Guide for wire bend space available when various manufacturers' disconnect switches are installed or Disconnect Ordering Information at hoffmanonline.com for disconnect ordering guidelines and wire bend space available. Check the enclosure dimension drawings to verify the chosen disconnect switch will fit in the enclosure.
**All 24.12-in. (613-mm) and deeper enclosures** using short connecting rods by the following manufacturers require a Hoffman platform assembly, catalog number ADSCPA, purchased separately.
- ABB Controls flange-operated devices
- Eaton Cutler-Hammer C361 devices
- Eaton Cutler-Hammer C371 mechanisms which use C371E, F, G, K operating mechanism (see Disconnect Enclosure Accessories)
- General Electric Type TDA devices (see Disconnect Enclosure Accessories)
- Schneider Square D® Class 9422 devices (see Disconnect Enclosure Accessories)

The platform assembly can be omitted if long connecting rods are ordered in place of short connecting rods.
- For Eaton Cutler-Hammer operating mechanisms C371E and C371F order catalog number C371CS1 connecting rod. For C371G and C371K order catalog number C371CS2 connecting rod.
- For General Electric devices, order catalog number TDSR extended length drive rod
- For Schneider Square D devices, order catalog number 9422-R2 extra long operating rod(s). Some devices require two rods.

Consult factory for space occupied on panel when platform is used.