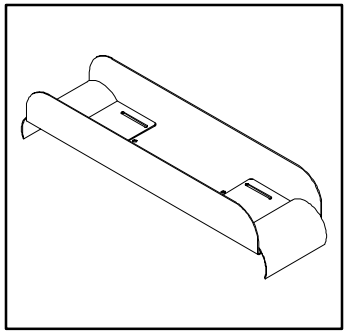

Hoffman®
A Pentair Company

Open Frame Rack

Top Waterfall
Oberer Wasserfall
Supérieure Chute d'eau
Superior Cascada

Hoffman Enclosures Inc.
2100 Hoffman Way
Anoka, MN 55303–1745
(763) 422–2211 Tel
www.hoffmanonline.com

Pentair Electronic Packaging
170 Commerce Drive
Warwick, RI 02886
(401) 732–3770
www.pentair–ep.com

Canada
Hoffman–Schroff
111 Grangeway Avenue, Suite 504
Scarborough, Ontario M1H 3E9
(416) 289–2770 Fax (416) 289–2883
1–800–668–2500 (Canada only)

Germany
Schroff GmbH
Langenalber Str. 96–100
75334 Straubenhardt
49 (07082) 794–0 Fax 49 (07082) 794–200
www.schroff.de

Great Britain
Schroff UK Ltd.
Maylands Avenue
Hemel Hempstead, Herts HP2 7DE
44 (01442) 240471 Fax 44 (01442) 213508
www.schroff.co.uk

Sweden
Schroff Scandinavia AB
Box 2003
12821 Skarpnäck
46 08683 61 00 Fax 46 08683 61 99
www.schroff.se

France
Schroff Sas
Z.I., 4 rue du Marais
67660 Betschdorf
33 03 88 90 64 90 Fax 33 03 88 90 64 88
www.schroff.fr

Italy
Schroff srl
Viale Milano, 119
21013 Gallarate (Varese)
39 0331 79 40 03 Fax 39 0331 79 34 50

Singapore
Hoffman–Schroff Pte. Ltd.
#01–68/71 German Centre
25 International Business Park
Singapore 609916
65 5 62–78 90 Fax 65 5 62–78 99

Japan
Schroff K.K.
Nisso No. 13 Bldg. 4F
2–5–1 Shinyokohama
Kohoku–Ku, Yokohama shi
Kanagawa 222–0033
81 (045) 476–02 81 Fax 81 (045) 476–02 89

Finland
Schroff Scandinavia AB
Peräsimentie 8
03100 Nummela
358 09 222 68 00 Fax 358 09 222 38 86

Norway
Schroff Scandinavia AB
Bjoernerudveien 24
1266 Oslo
47 022 76 33 60 Fax 47 022 76 33 69

1 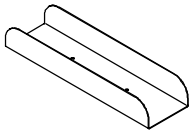 (1x)	2 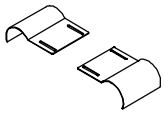 (2x)
3 (4x)	4 1/4–20x.625 (2x)
5 1/4 (2x)	6 1/4–20 (2x)

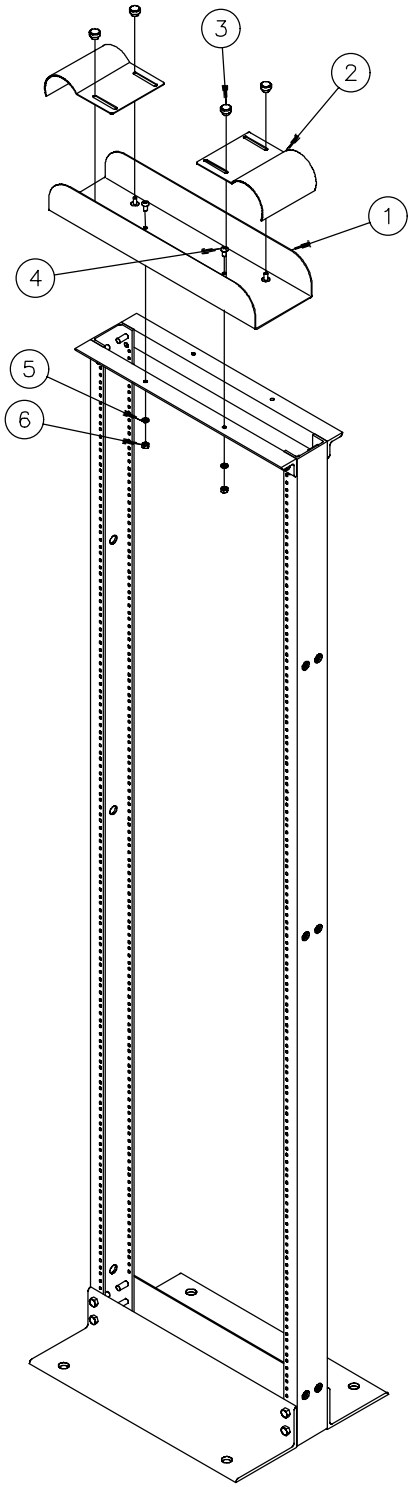

© 2001 Hoffman Enclosures Inc.