A Pentair Company

For Variable Depth Disconnect Devices
And For Flexible Cable Disconnect Devices

In Hoffman Bulletin A19 (painted steel)
Or Hoffman Bulletin A19S (stainless steel)
Wall Mounted Disconnect Enclosures

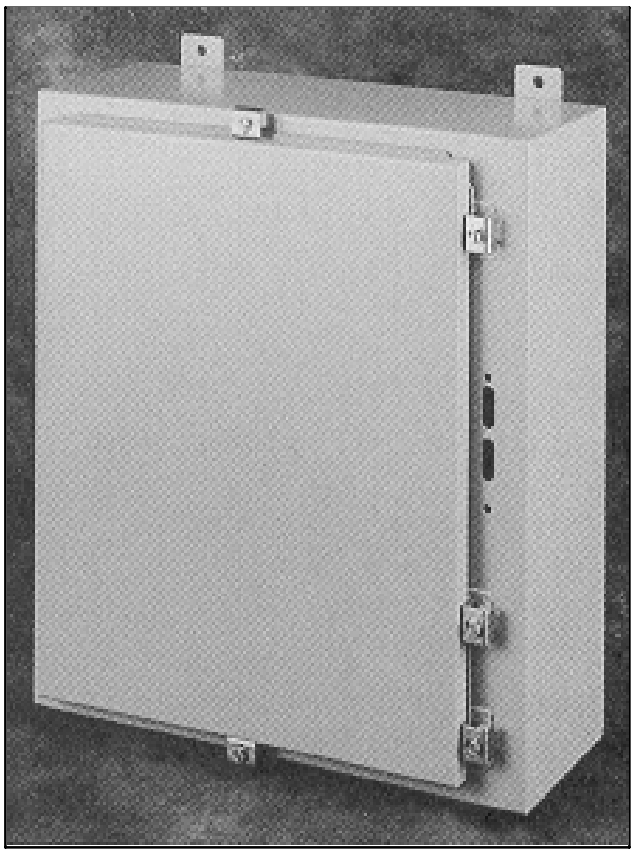

© 2005 Hoffman Enclosures Inc.
P/N 99401747

⚠ WARNING

The functions, fits, and clearances of the installation described hereon are calculated from information supplied by the manufactures of the equipment to be installed. Be certain to check the function, fits, and clearances of all equipment both before and after installation to assure that it operates properly and safely and meets all applicable codes, standards, and regulations.

In the event the completed installation does not function properly or fails to meet any such codes, standards, or regulations, do not attempt to make alterations or operate the equipment. Report such facts immediately to:

Customer Service Dept.
Hoffman Enclosures Inc.
2100 Hoffman Way
Anoka, MN 55303–1745
(763) 422–2211

NOTICE

To maintain the environmental rating of this enclosure: install in any opening, only listed or recognized disconnect devices, or conduit hubs that have the same environmental rating as the enclosure. Install in compliance with the installation instructions of the device.

Installation Instruction Index

Brand of Disconnect	Type	See Pages
Allen–Bradley 1494V	Variable Depth	4,5
Cutler–Hammer C361/C371	Variable Depth	6,7
General Electric STDA	Variable Depth	8,9
Square D 9422	Variable Depth	10,11
Cutler–Hammer C371 Flex Shaft™	Flexible Cable	12,13
General Electric SCH	Flexible Cable	14,15
Siemens I–T–E Max Flex™	Flexible Cable	16,17
Square D 9422	Flexible Cable	18,19

© 2005 Hoffman Enclosures Inc.

INSTALLATION STEPS

Step 1 – Drill mounting holes in panel for specific disconnect device being installed. See installation instruction index on page 2 for appropriate panel drilling instructions. Additional holes may be required when using fused switches. See disconnect manufacturers instructions.

Step 2 – Install operating handle on enclosure flange in holes provided. Follow disconnect manufacturers instructions.

Step 3 – Install disconnect device on panel. Follow disconnect manufacturers instructions for installation and adjustment.

Step 4 – Install door catch (furnished by disconnect manufacturer) on bracket that is welded to the inside of the Hoffman bulletin A19 or A19S enclosure door. See Figure 1 below. (the disconnect manufacturer door catch bracket is not required) See disconnect manufactures instructions to adjust door catch to properly interlock with the disconnect operating handle.

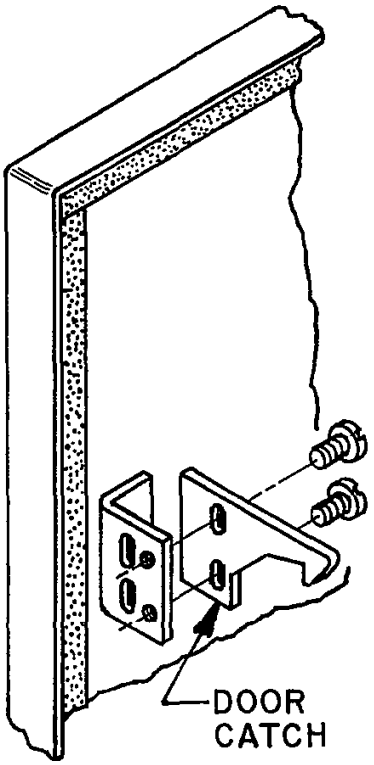

Figure 1

© 2005 Hoffman Enclosures Inc.

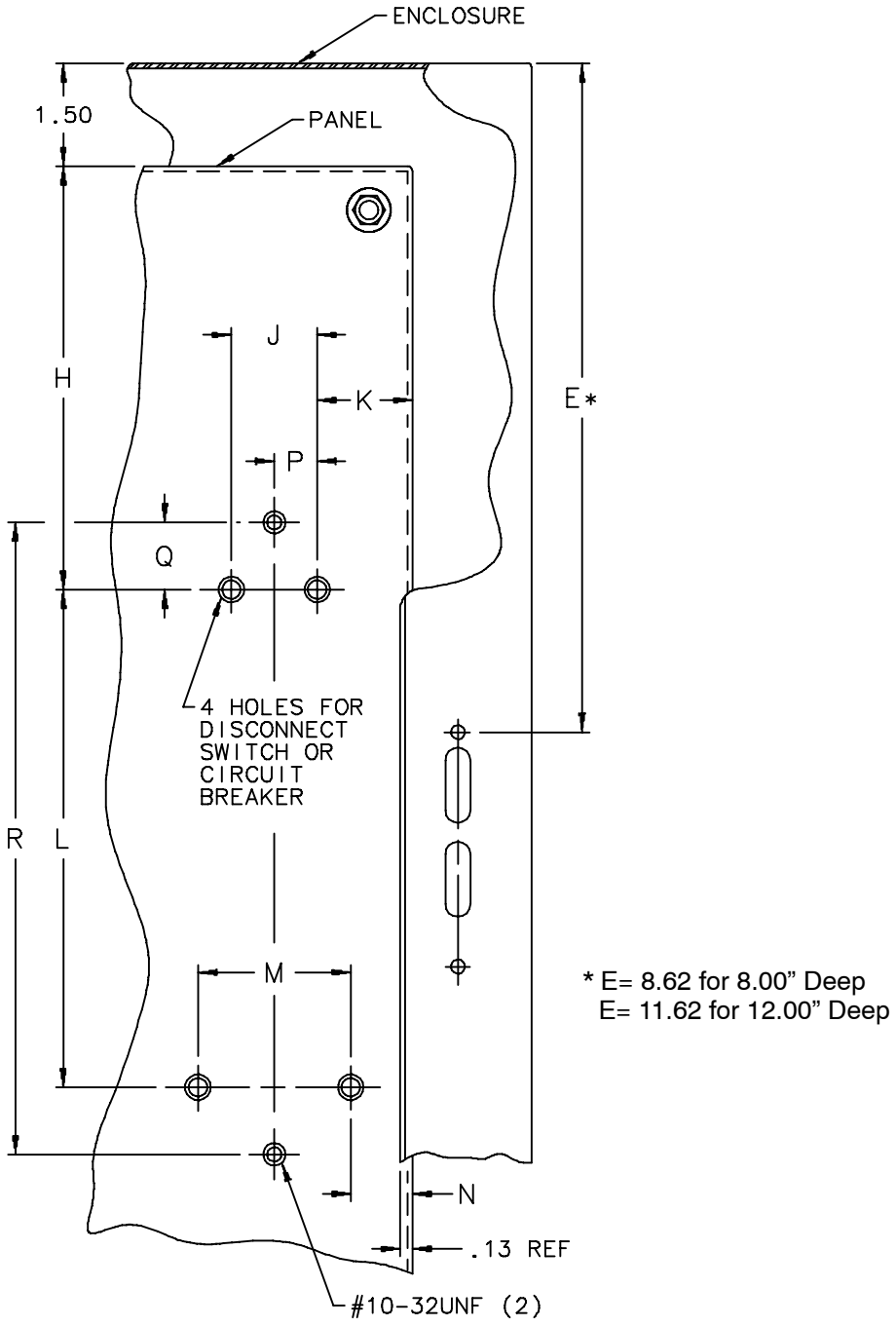

Figure 3

© 2005 Hoffman Enclosures Inc.

TABLE 1
Sub−Panel Drilling

Allen−Bradley Bulletin 1494V Disconnect or operator for Circuit Breaker	Enclosure Depth 8.00 H	Enclosure Depth 12.00 H	J	K	L	M	N	P	Q	R	Hole Size
*1494V−DS30 (30 AMP)	5.28	8.28	1.97	2.56	4.33	3.94	1.56	− − −	− − −	− − −	.159∅ 10−32 UNF
*1494V−DS60 (60 AMP)											
*1494V−DS100 (100A./series B)											
*1494V−DS200 (200 A./series B)	Do Not Install	7.16	2.36	2.94	4.92	4.72	1.81	− − −	− − −	− − −	.201∅ 1/4−20 UNC
1494V−M40 for 15−150 AMP West.	7.38	10.38	1.38	1.09	4.50	1.38	1.09	− − −	− − −	− − −	.136∅ 8−32 UNF
1494V−M50 for 15−150 AMP West.	Do Not Install	10.94	1.38	1.25	7.25	1.38	1.25	.69	2.03	10.62	.201∅ 1/4−20 UNC
1494V−M60 for 70−400 AMP West.	Do Not Install	9.88	1.72	1.78	8.44	1.72	1.78	.86	1.16	10.75	.201∅ 1/4−20 UNC

* See A−B Instructions For Locating Fuse Blocks.

NOTE: Allen−Bradley variable depth disconnects are provided with connecting rods that must be cut to length to fit the enclosure depth (from flange surface to subpanel surface). See table 2 and Allen−Bradley instructions.

TABLE 2

Bulletin	Hoffman Disconnect Enclosure Description	Enclosure Depth **C**	Allen−Bradley **D** (1)
A19 A19S	Wall Mounted Disconnect Enclosure	8.00	6.88
		12.00	10.88

1) This enclosure depth dimension is used to calculate the length of Allen−Bradley connecting rod(s).

© NIL Hoffman Enclosures Inc.

Wall–Mounted Disconnect Enclosures
Installation Instructions for Cutler–Hammer C361 and C371
Disconnects with Variable Depth Operating Mechanisms

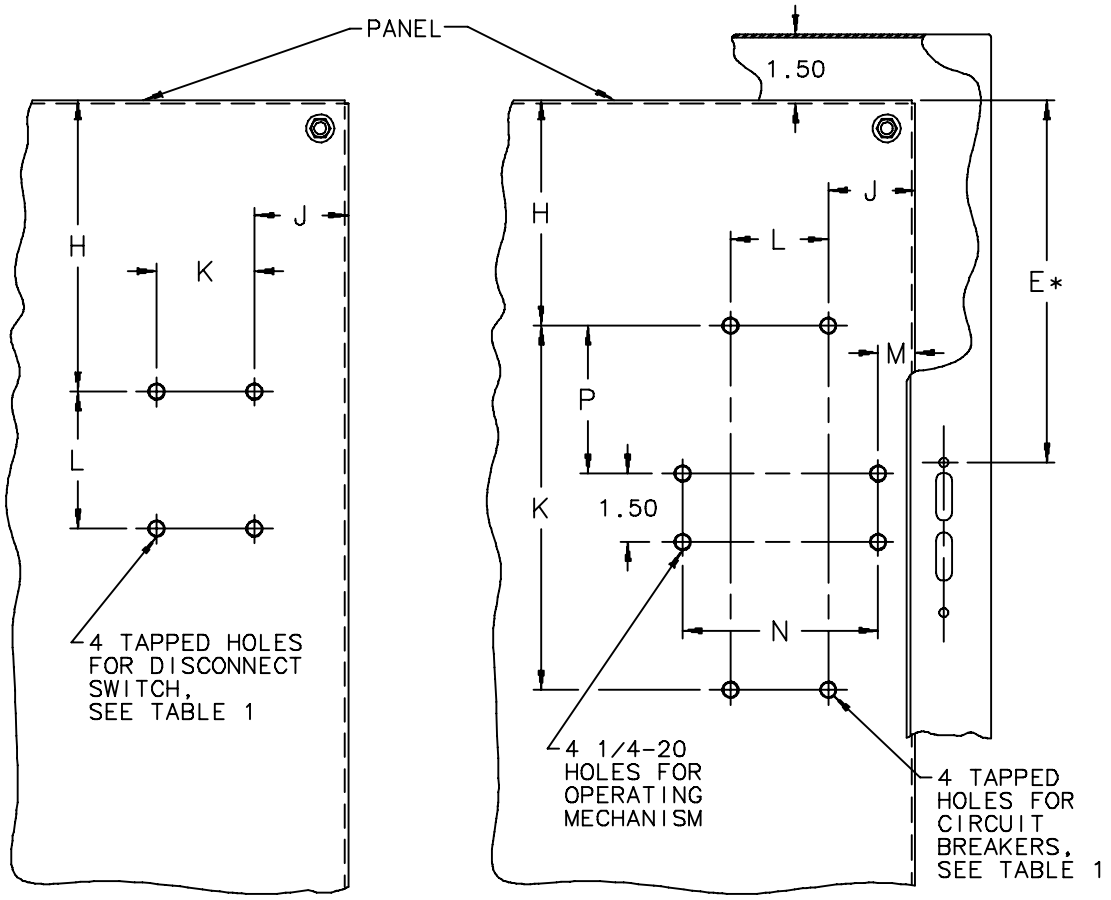

* E= 8.62 for 8.00” Deep
E= 11.62 for 12.00” Deep

Figure 3

Hole Pattern For Disconnect Switch	Size
C361NC/C361SC	30 AMP
C361ND/C361SD	60 AMP
C361NE/C361SE	100 AMP
C361NF/C361SF	200 AMP

Hole Pattern For Circuit Breaker	Frame Size
HMCP, FS, FH, EHD FDB, FD, HFD	150 AMP
HMCP, JS, JH, JL, JD, JDB, HJD, JDC	250 AMP
HMCP, HK, KS, KD, DK, KDB, HKD	400 AMP
LH, LS, LC	600 AMP

© 2005 Hoffman Enclosures Inc.

TABLE 1
Sub−Panel Drilling

Circuit Breaker or Disconnect Switch	Frame Size	H 8” Deep	H 12” Deep	J	K	L	M	N	P	Hole Size
C361NC (30A)	– – –	5.56	8.56	2.47	4.00	7.13	– – –	– – –	– – –	10−32 UNF
C361SC (30A)	– – –	5.56	8.56	2.47	4.00	9.75	– – –	– – –	– – –	10−32 UNF
C361ND (60A)	– – –	5.56	8.56	2.47	4.00	7.13	– – –	– – –	– – –	10−32 UNF
C361SD (60A)	– – –	5.56	8.56	2.47	4.00	9.75	– – –	– – –	– – –	10−32 UNF
C361NE (100A)	– – –	5.38	8.38	2.34	5.50	7.13	– – –	– – –	– – –	10−32 UNF
C361SE (100A)	– – –	5.38	8.38	2.34	5.50	11.88	– – –	– – –	– – –	10−32 UNF
C361NF (200A)	– – –	3.79	6.79	.81	8.50	15.50	– – –	– – –	– – –	5/16−18 UNC
C361SF (200A)	– – –	3.79	6.79	.81	8.50	15.50	– – –	– – –	– – –	5/16−18 UNC
HMCP, FS, FH, EHD, FDB, FD, HFD	150A	7.79	10.79	2.62	4.50	1.38	– – –	– – –	– – –	8−32 UNF
JS, JH, JL	250A	Do Not Install	10.75	3.13	7.25	1.38	.31	6.95	2.75	10−32 UNF
HMCP	250A		10.75	3.13	7.25	1.38	.31	6.95	2.75	1/4−20 UNC
KH, KS, DK, KDB, KD, HKD, KDC	400A		10.31	2.96	8.44	1.72	.31	6.95	3.18	1/4−20 UNC
HMCP	400A		10.31	2.96	8.44	1.72	.31	6.95	4.00	1/4−20 UNC
LH, LS, LC	600A		8.42	3.88	9.53	2.75	.23	10.05	4.32	1/4−20 UNC

NOTE: Cutler−Hammer variable depth disconnects are provided with connecting rods that must be cut to length to fit the enclosure depth (from flange surface to subpanel surface). See table 2 and Cutler−Hammer instructions.

TABLE 2

Bulletin	Hoffman Disconnect Enclosure Description	Enclosure Depth **C**	Cutler−Hammer **D** (1)
A19 A19S	Wall Mounted Disconnect Enclosure	8.00	6.88
		12.00	10.88

1) This dimension is used to determine length to cut Cutler−Hammer connecting rods.

© 2005 Hoffman Enclosures Inc.

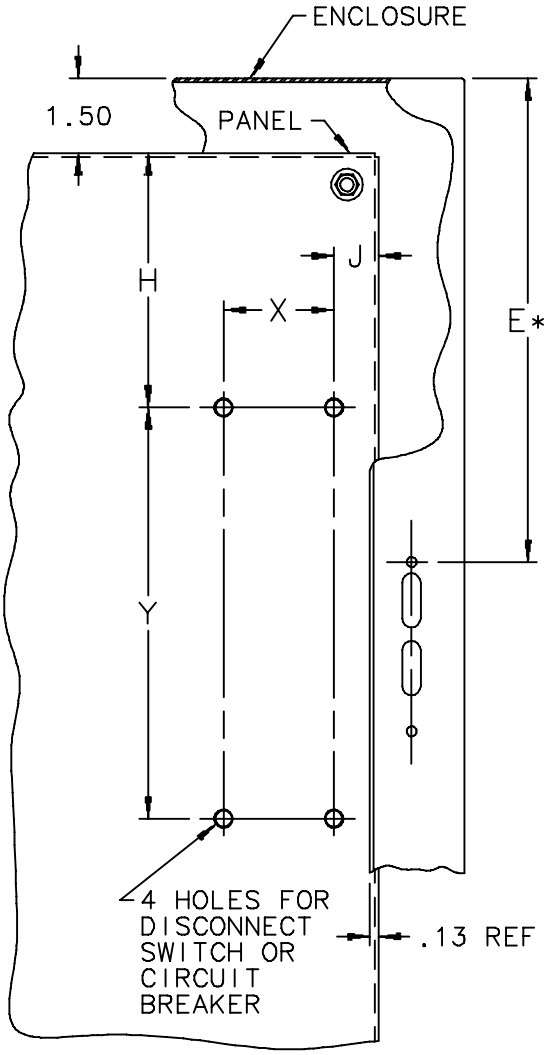

* E= 8.62 for 8.00” Deep
E= 11.62 for 12.00” Deep

Figure 3

© 2005 Hoffman Enclosures Inc.

TABLE 1
Sub−Panel Drilling

G.E. Operating Mechanism	Frame Size	No. Of Holes	Hole Size	H 8” Deep	H 12” Deep	J	X	Y
TDOM1A	QMR−QMW	4	1/4−20	5.50	8.50	.75	3.00	6.75
TDOM1JA	QMR−QMW	4	1/4−20	5.50	8.50	.75	3.00	6.75
TDOM1B	QMR−QMW	4	1/4−20	5.50	8.50	.75	3.00	6.75
TDOM1JB	QMR−QMW	4	1/4−20	5.50	8.50	.75	3.00	6.75
TDOM2	QMR−QMW	4	1/4−20	5.50	8.50	.69	7.00	7.25
SDOM1A	SE150	4	1/4−20	5.50	8.50	.75	3.00	6.75
SDOM3	SF250	4	1/4−20	5.91	8.91	1.69	2.75	10.88
SDOM4	SG600	6	1/4−20	Do Not Install	6.91	1.34	3.35	5.51 AND 12.20
SDOM1A	TEB, TED	4	1/4−20	5.50	8.50	.75	3.00	6.75
SDOM1A SDOM1AP	TB1 TEC, TECL	4	1/4−20	5.50	8.50	.75	3.00	6.75
TDOM3	TFJ, TFK	4	1/4−20	5.50	8.50	1.69	2.75	10.88
TDOM4	JFRAME	4	1/4−20	4.88	7.88	1.63	5.50	8.63
TDOM5	TB4, TJH	4	1/4−20	4.88	7.88	1.63	5.50	14.63
TDOM6	K FRAME	4	1/4−20	Do Not Install	4.13	1.63	5.50	16.75

NOTE: General Electric variable depth disconnects are provided with connecting rods that must be cut to length to fit the enclosure depth (from flange surface to subpanel surface). See table 2 and General Electric instructions.

TABLE 2

Bulletin	Hoffman Disconnect Enclosure Description	Enclosure Depth **C**	G.E. **D** (1)
A19 A19S	Wall Mounted Disconnect Enclosure	8.00	6.88
		12.00	10.88

1) This dimension is used to determine length to cut General Electric drive rod and stiffener rod (if used).

© 2005 Hoffman Enclosures Inc.

Wall–Mounted Disconnect Enclosures
Installation Instructions for Square D 9422
Variable Depth Operating Mechanisms

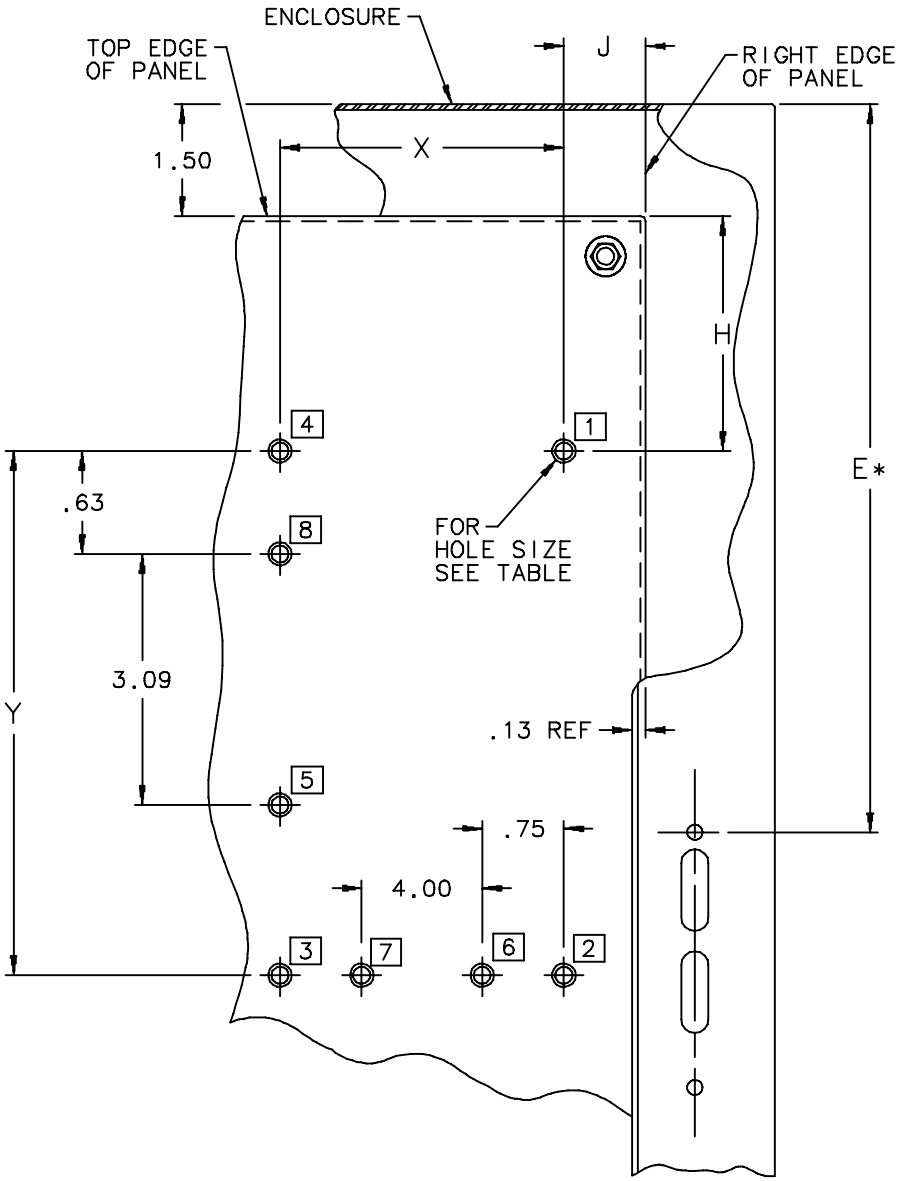

* E= 8.62 for 8.00” Deep
E= 11.62 for 12.00” Deep

Figure 3

© 2005 Hoffman Enclosures Inc.

TABLE 1
Sub−Panel Drilling

Square D Operating Mechanism	No. Of Holes	Mtg. Hole Position	Hole Size	H 8” Deep	H 12” Deep	J	X	Y
TCN, TCF	4	1,4,6,7	10−24	6.13	9.13	.38	5.50	4.50
TDN, TDF	4	1,4,6,7	10−24	6.13	9.13	.38	5.50	4.50
TEN, TEF	4	1,4,6,7	10−24	6.13	9.13	.38	5.50	4.50
TC	4	1,2,58	10−24	5.94	8.94	.38	5.13	6.50
TD	4	1,2,47	10−24	6.13	9.13	.47	5.19	5.25
TE	4	1,2,3,4	1/4−20	Do Not Install	7.50	1.84	5.50	6.50
TF	4	1,2,3,4	5/16−18	Do Not Install	6.88	1.31	9.44	8.00
RG1	4	1,2,3,4	8−32	6.13	9.13	1.47	1.18	3.94
RN1	4	1,2,3,4	8−32	6.66	9.66	1.38	1.50	5.13
RP1	4	1,2,3,4	10−24	6.66	9.66	1.56	1.50	7.13
RR−1	4	1,2,3,4	1/4−20	6.00	9.00	.19	6.63	6.56
	4	1,2,3,4	.375 Dia.	4.63	7.63	2.50	2.00	9.25

NOTE: Square D variable depth disconnects are provided with connecting rods that must be cut to length to fit the enclosure depth (from flange surface to subpanel surface). See table 2 and Square D instructions.

TABLE 2

Bulletin	Hoffman Disconnect Enclosure Description	Enclosure Depth **C**	Square “D” **D** (1)
A19 A19S	Wall Mounted Disconnect Enclosure	8.00	6.88
		12.00	10.88

1) This dimension is used to determine length to cut Square D operating rods. Use .070 for “T” dimension.

© 2005 Hoffman Enclosures Inc.

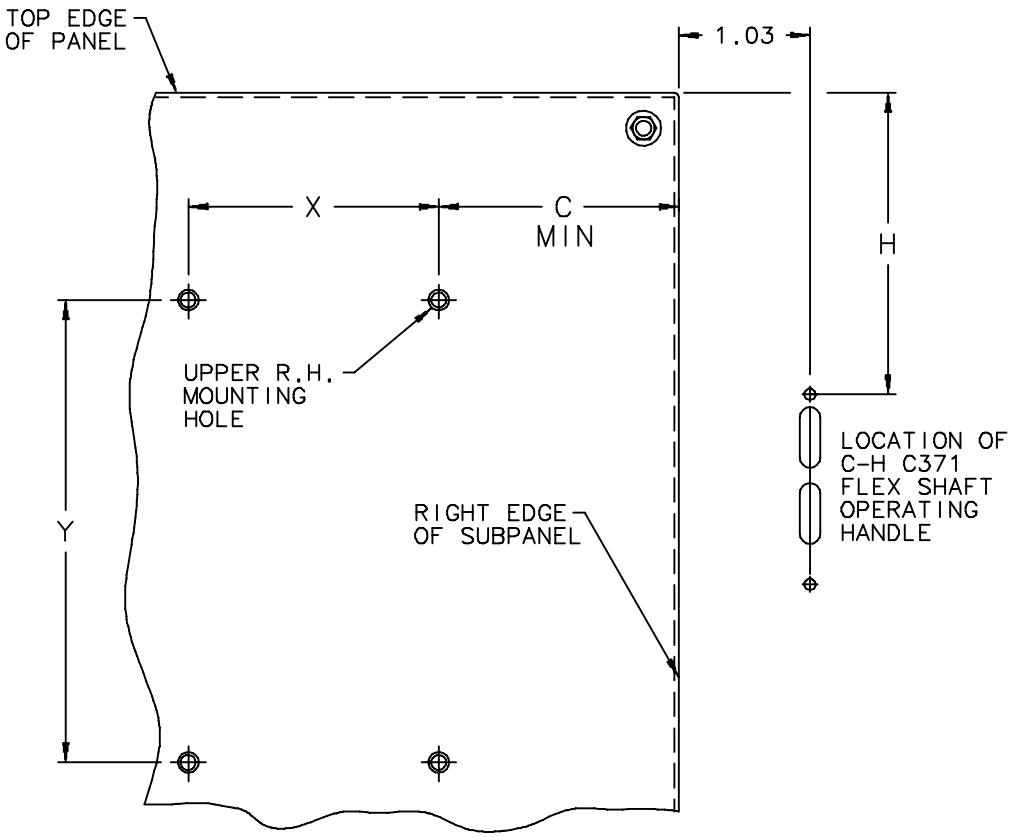

Figure 3 CH

© 2005 Hoffman Enclosures Inc.

TABLE 1 Sub−Panel Drilling				
Circuit Breaker Frame Size	Hole Size	**X**	**Y**	**C**min
F	8−32	1.375	4.500	1.38
J	1/4−20	1.375	7.250	1.38
K	1/4−20	1.719	8.438	1.88

TABLE 2			
Bulletin	Hoffman Disconnect Enclosure Description	Enclosure Depth	**H**
A19 A19S	Wall Mounted Disconnect Enclosure	8.00	7.13
		12.00	10.13

Step1 − Determine disconnect hole pattern from Figure 3 CH and the above tables. See disconnect manufacturers instructions for range of disconnect location based on cable length being used and depth of enclosure.

NOTE − Locate disconnect so appropriate wire bend space is provided for the line side wire size being used. Refer to National Electrical Code Article 430−10b for wire bend space required.

© 2005 Hoffman Enclosures Inc.

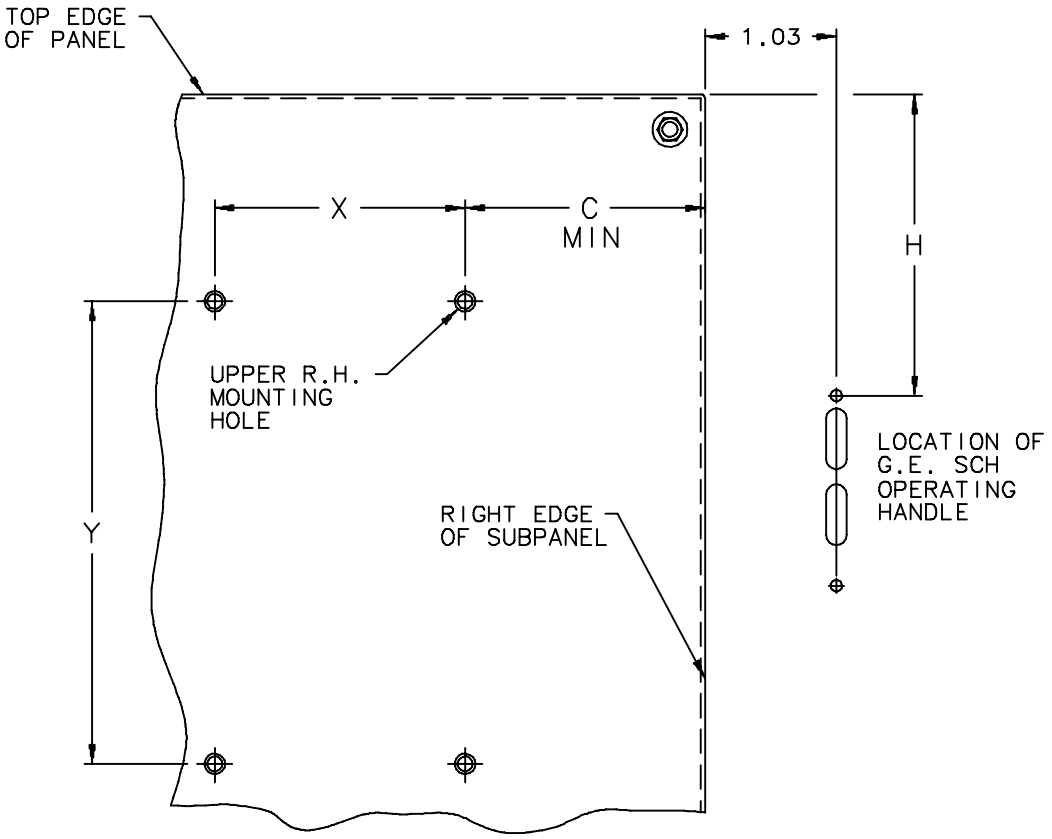

Figure 3 GE

© 2005 Hoffman Enclosures Inc.

TABLE 1
Sub−Panel Drilling

Cable Mechanism	Circuit Breaker	No. of Holes	Hole Size	**X**	**Y**	**C**min
SCOM1A	E150	4	8−32	1.38	4.88	1.38
SCOM1EF	SE150	4	10−32	1.38	4.88	1.38
	SF250	4	12−24	1.38	7.75	1.38
SCOM1G	SG600	4	12−24	1.81	7.75	1.84
SCOM1K	SK1200	4	5/16−18	2.75	14.25	2.75

TABLE 2

Bulletin	Hoffman Disconnect Enclosure Description	Enclosure Depth **C**	**H**
A19 A19S	Wall Mounted Disconnect Enclosure	8.00	7.13
		12.00	10.13

Step1 − Determine disconnect hole pattern from Figure 3 GE and the above tables. See disconnect manufacturers instructions for range of disconnect location based on cable length being used and depth of enclosure.

NOTE − Locate disconnect so appropriate wire bend space is provided for the line side wire size being used. Refer to National Electrical Code Article 430−10b for wire bend space required.

© 2005 Hoffman Enclosures Inc.

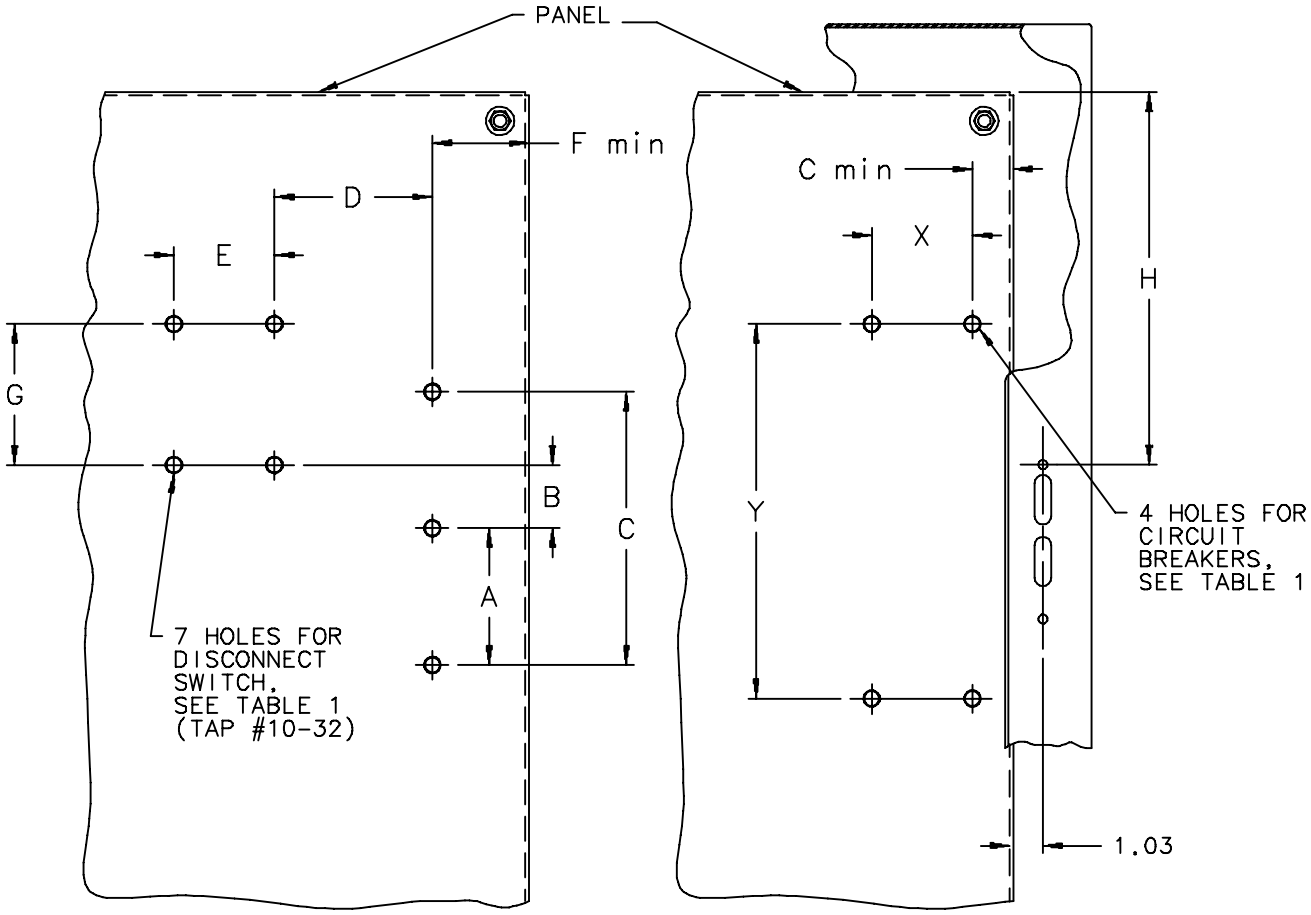

Figure 3 ITE

© 2005 Hoffman Enclosures Inc.

TABLE 1
Sub−Panel Drilling For Disconnect Switches

I−T−E* Mechanism	Fits Disconnect Device	No. of Holes	A	B	C	D	E	Fmin	G
FHOS06036R	30 A SW.	4 & 3	2.00	1.69	5.10	2.88	1.50	.66	1.89
FHOS06036R	60 A SW.	4 & 3	2.00	1.69	5.10	2.88	1.50	.66	1.89
FHOS06036R	100 A SW.	4 & 3	2.00	.82	5.10	3.21	1.81	.66	3.00
FHOS20036R	200 A SW.	4 & 3	2.50	−1.00	5.50	1.00	7.86	.62	5.44

TABLE 1
Sub−Panel Drilling For Circuit Breakers

I−T−E* Mechanism	No. of Holes	Hole Size	X	Y	Cmin
FHOE036	4	8−32	1.00	5.00	1.00
FHOF036	4	1/4−20	1.50	7.50	1.50
FHOJ036	4	1/4−20	2.50	9.75	2.50
FHOLM036	4	1/4−20	2.50	9.75	2.50

* These mechanisms include 36” operating cables. If longer cables are needed, order I−T−E components separately.

TABLE 2
Location of Disconnect Operating Handle

Bulletin	Hoffman Disconnect Enclosure Description	Enclosure Depth	H
A19 A19S	Wall Mounted Disconnect Enclosure	8.00	7.13
		12.00	10.13

Step1 − Determine disconnect hole pattern from Figure 3 I−T−E and the above tables. See disconnect manufacturers instructions for range of disconnect location based on cable length being used and depth of enclosure.

NOTE − Locate disconnect so appropriate wire bend space is provided for the line side wire size being used. Refer to National Electrical Code Article 430−10b for wire bend space required.

© 2005 Hoffman Enclosures Inc.

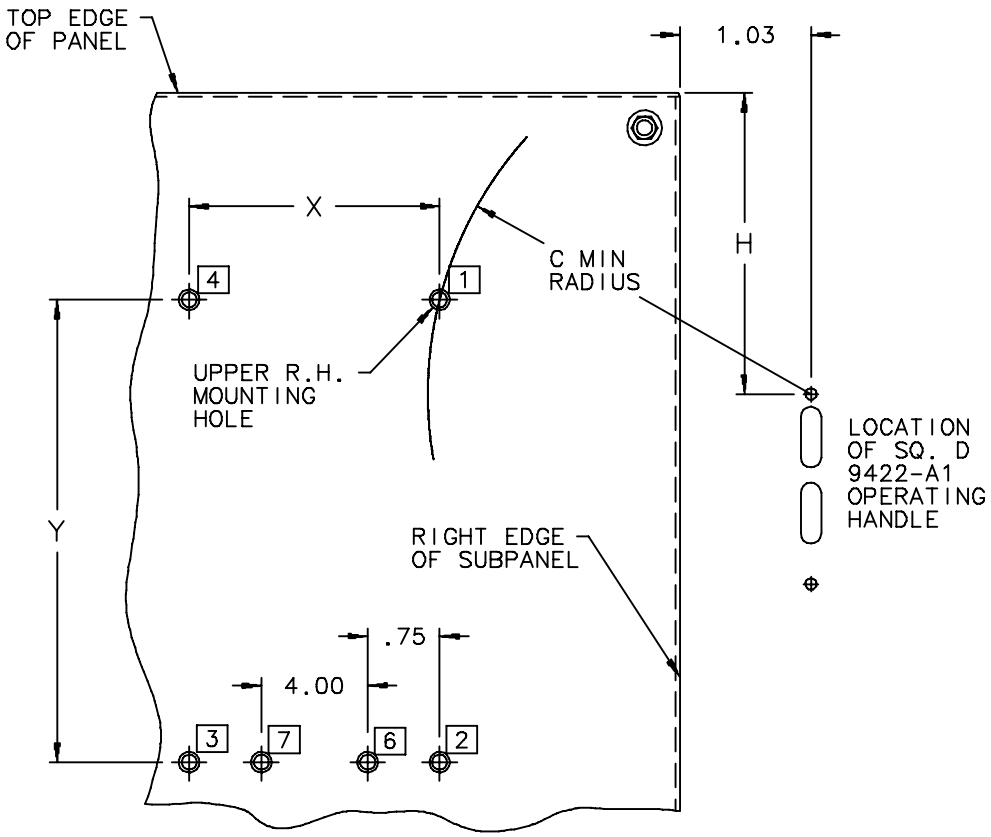

Figure 3 SQ D

© 2005 Hoffman Enclosures Inc.

TABLE 1
Sub−Panel Drilling

Cable Mechanism	Disconnect Mechanism	No. of Holes	Hole Position	Hole Size	**X**	**Y**	**C**min*
CFT	TCN, TCF	4	1,4,6,7	10−24	5.50	4.50	1.00
	TDN, TDF	4	1,4,6,7	10−24	5.50	4.50	1.00
	TEN, TEF	4	1,4,6,7	10−24	5.50	4.50	1.00
CGJ	GJL	4	1,2,3,4	8−32	1.18	3.94	2.50
CFA	FAL, FHL	4	1,2,3,4	8−32	1.50	5.13	3.75
CKA	KAL, KHL	4	1,2,3,4	10−24	1.50	7.13	3.75
CLA**	LAL, LHL	4	1,2,3,4	1/4−20	6.63	6.56	2.25
		4	1,2,3,4	.375 Dia.	2.00	9.25	− − −

* See Square “D” instructions for range of “C” dimension which vary for 36”, 60” and 120” cable lengths.

** See Square “D” instructions for relationship between 1/4−20 and .375 diameter holes for LA circuit breaker.

TABLE 2

Bulletin	Hoffman Disconnect Enclosure Description	Enclosure Depth	**H**
A19 A19S	Wall Mounted Disconnect Enclosure	8.00	7.13
		12.00	10.13

Step1 − Determine disconnect hole pattern from Figure 3 SQ. D and the above tables. See disconnect manufacturers instructions for range of disconnect location based on cable length being used and depth of enclosure.

NOTE − Locate disconnect so appropriate wire bend space is provided for the line side wire size being used. Refer to National Electrical Code Article 430−10b for wire bend space required.

© NIL Hoffman Enclosures Inc.

Hoffman Enclosures Inc.
2100 Hoffman Way
Anoka, MN 55303–1745
(763) 422–2211
www.hoffmanonline.com

Pentair Electronic Packaging
170 Commerce Drive
Warwick, RI 02886
(401) 732–3770
www.pentair–ep.com

Mexico
Pentair Enclosures, S. de R.L. de C.V.
Federico T. de la Chica No. 8 Piso 4 A
Circuito Comercial Plaza Satélite
Ciudad Satélite,
Naucalpan, México C.P. 53100
011–52–55–5393–8263

Canada
Hoffman–Schroff
111 Grangeway Avenue, Suite 504
Scarborough, Ontario M1H 3E9
(416) 289–2770
1–800–668–2500 (Canada only)

Germany
Schroff GmbH
Langenalber Str. 96–100
75334 Straubenhardt
49 (07082) 794–0 www.schroff.de

Great Britain
Schroff UK Ltd.
Maylands Avenue
Hemel Hempstead, Herts HP2 7DE
44 (01442) 240471 www.schroff.co.uk

Sweden
Schroff Scandinavia AB
Box 2003
12821 Skarpnäck
46 08683 61 00 www.schroff.se

France
Schroff Sas
Z.I., 4 rue du Marais
67660 Betschdorf
33 03 88 90 64 90 www.schroff.fr

Italy
Schroff srl
Viale Milano, 119
21013 Gallarate (Varese)
39 0331 79 40 03

Singapore
Hoffman–Schroff Pte. Ltd.
#01–68/71 German Centre
25 International Business Park
Singapore 609916
65 5 62–78 90

Japan
Schroff K.K.
Nisso No. 13 Bldg. 4F
2–5–1 Shinyokohama
Kohoku–Ku, Yokohama shi
Kanagawa 222–0033
81 (045) 476–02 81

Finland
Schroff Scandinavia AB
Peräsimentie 8
03100 Nummela
358 09 222 68 00

Norway
Schroff Scandinavia AB
Bjoernerudveien 24
1266 Oslo
47 022 76 33 60

© 2005 Hoffman Enclosures Inc.